CONSTRUCTION LEGEND

- EXCAVATE 215mm BELOW DESIGN LEVELS AND CONSTRUCT BLUESTONE PAVEMENT AS PER TYPICAL CROSS SECTION AND DETAILS IN CoM STD DWG 1P 50402.
- RECONSTRUCT NON-CBD ASPHALT FOOTPATH WITH
  - 25mm OF SIZE 7mm TYPE N HMA, WEARING COURSE
  - 35mm OF SIZE 14mm TYPE N HMA, BASE COURSE
  - 50mm OF CLASS 2 COMPACTED CRUSHED ROCK
- INSTALL BLUESTONE TREE SURROUND AROUND ALL SIDES OF EXISTING TREE PLOT. EXCAVATE 100mm BELOW EXISTING EARTHEN SURFACE WITHIN TREE PLOT AND BACKFILL WITH 100mm OF APPROVED SUBSOIL. INSTALL 'SOAK THRU POROUS ASPHALT PAVEMENT (SANDY COLOUR) FLUSH WITH FOOTPATH AS PER DETAIL 1.
  NOTE TREE SURROUND TO BE WITHIN FULL PAVER JOINTS.
- EJ — INSTALL EXPANSION JOINT IN BLUESTONE PAVING AS PER DETAIL 2 IN MCC STD. DWG. 1P 50402.
- SUPPLY AND SET NEW 300mm BLUESTONE KERB AND SINGLE ROW PITCHER CHANNEL
- RENEW 250x100mm BLUESTONE GUTTERSTONE CHANNEL
- CONSTRUCT 937x549mm GRATED PIT WITH BLUESTONE OVERFLOW KERB, REFER CoM STD DRG 1P50301
- CONSTRUCT 600x600mm JUNCTION PIT WITH HEAVY DUTY COVER, REFER CoM STD DRG 1P50318
- EXISTING DRAIN
- EXISTING ELECTRICAL
- EXISTING SEWER
- EXISTING GAS
- EXISTING WATER
- EXISTING TELECOM

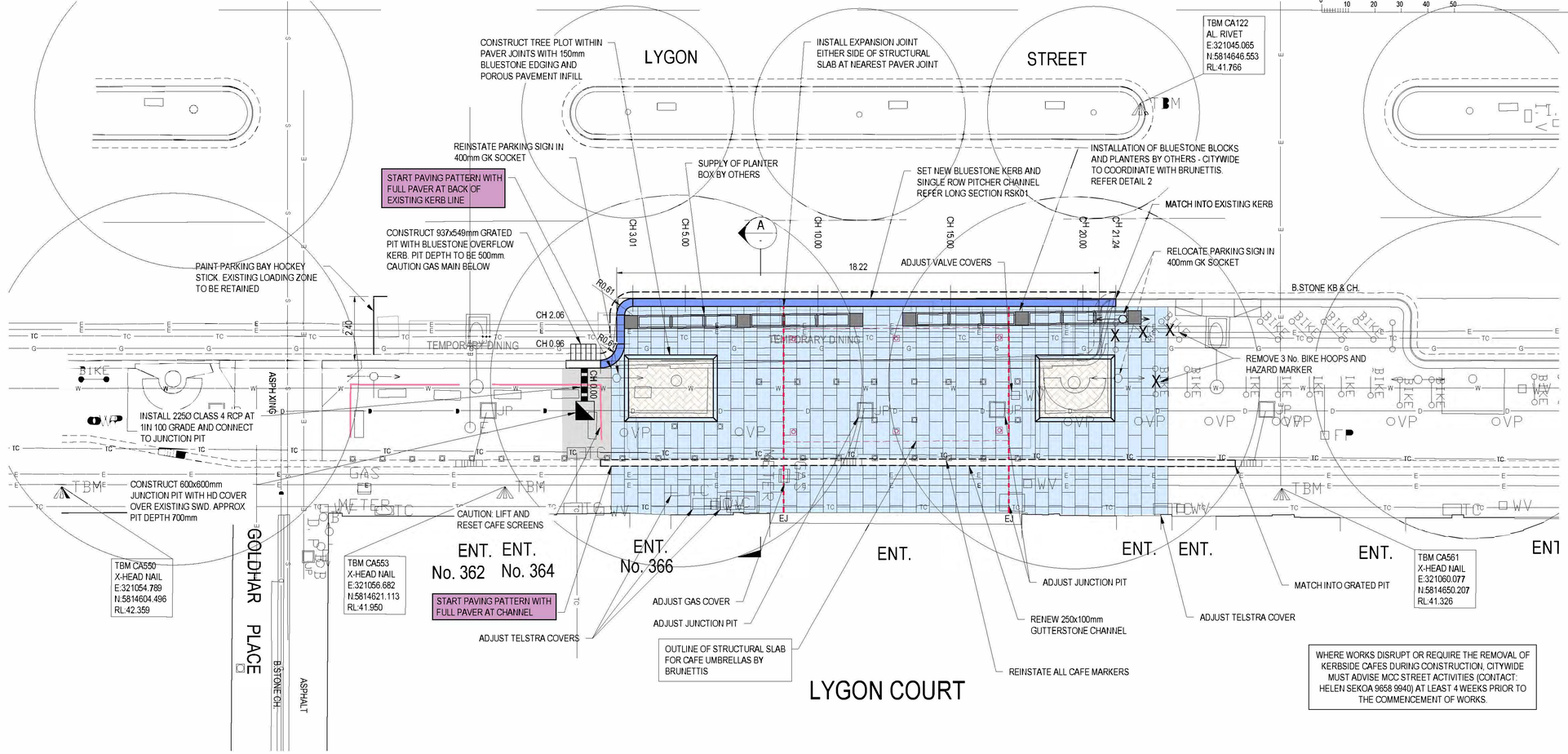

WHERE WORKS DISRUPT OR REQUIRE THE REMOVAL OF KERBSIDE CAFES DURING CONSTRUCTION, CITYWIDE MUST ADVISE MCC STREET ACTIVITIES (CONTACT: HELEN SEKOA 9658 9940) AT LEAST 4 WEEKS PRIOR TO THE COMMENCEMENT OF WORKS.

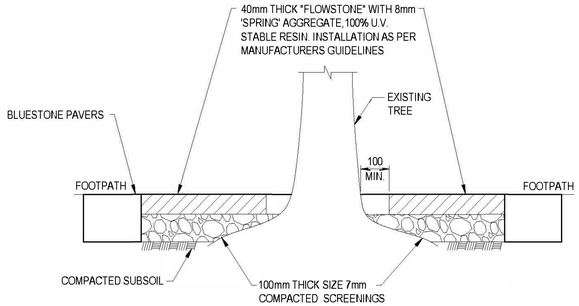

TREE PLOT DETAIL (1)

NOT TO SCALE

HORIZONTAL ALIGNMENT REPORT FOR DESIGN ALIGNMENT RSK01

Point Type	Chainage	Coordinates X	Y	Z	Bearing Deg Min Sec	Radius
Curve (Start Aln)	0.000	321052.379	5814625.217	41.808	6°23'33.13"	-0.61
Curve	0.667	321052.113	5814625.793	41.821	304°05'12.05"	-0.61
Curve-Tangent	0.959	321051.843	5814625.894	41.827	276°48'21.10"	-0.61
Tangent-Curve	2.056	321050.752	5814626.017	41.850	276°25'36.81"	
Curve	2.667	321050.273	5814626.354	41.863	333°53'27.72"	0.61
Curve-Tangent	3.014	321050.215	5814626.692	41.870	6°36'47.77"	0.61
Straight	10.000	321051.009	5814633.632	41.690	6°31'12.29"	
Straight	20.000	321052.144	5814643.568	41.470	6°31'12.29"	
Straight (End Aln)	21.237	321052.285	5814644.797	41.439	6°31'12.29"	

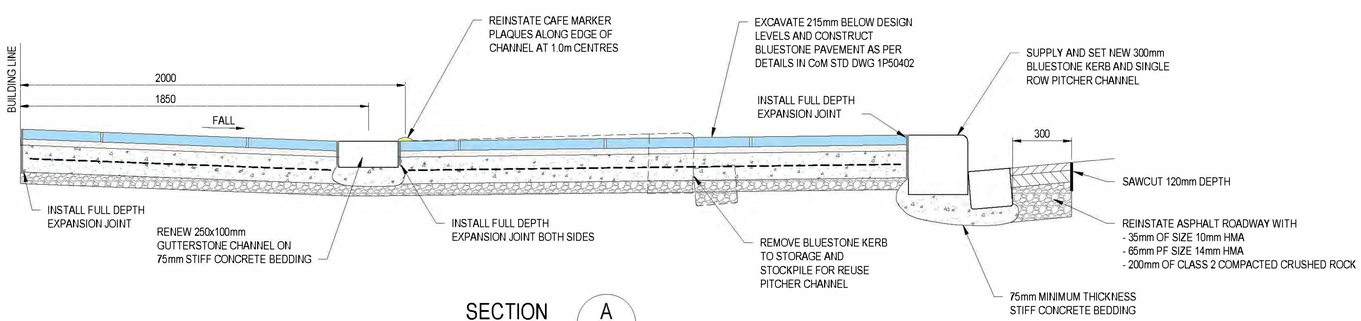

SECTION (A)

NOT TO SCALE